Compact class

Wacker Neuson All-Wheel Dumpers
1001 • 1501 • 1601$_{2WD}$ • 2001

WACKER NEUSON

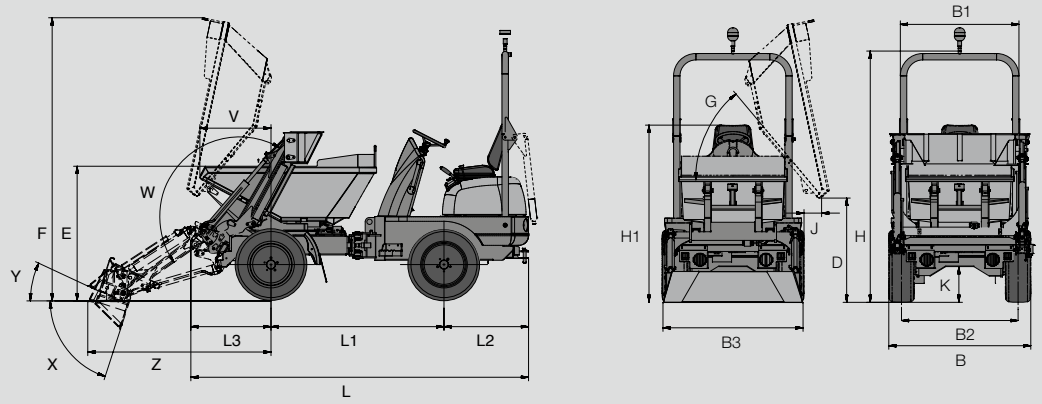

2001 SLE

1001
1501
1601
2001

DIMENSIONS	1001	1001 (narrow)	1501 (High-tipping)	1501 (Swivel-tipping)	1601 (Front-Tipping)	1601 (High-tipping)	1601 (Swivel-tipping)	2001 (Swivel tipping)	2001 (Tipping with low dump height)	2001 (SLE)
B	1180 mm	990 mm	1305 mm	1305 mm	1305 mm	1305 mm	1305 mm	1485 mm	1485 mm	1485 mm
B1	1130 mm	990 mm	1225 mm	1225 mm	1225 mm	1225 mm	1225 mm	1250 mm	1250 mm	1250 mm
B2	–	–	1050 mm	1050 mm	1050 mm	1050 mm	1050 mm	1230 mm	1230 mm	1230 mm
C	385 mm	385 mm	–	–	–	–	–	–	350 mm	–
C1	510 mm	510 mm	400 mm	280 mm	370 mm	400 mm	280 mm	–	–	–
D	1160 mm	1160 mm	370 mm	680 mm	360 mm	370 mm	680 mm	–	–	–
D1	465 mm	465 mm	1240 mm	1140 mm	1240 mm	1240 mm	1140 mm	–	1090 mm	1090 mm
D2	1560 mm	1140 mm	2325 mm	–	–	2325 mm	–	–	–	–
D3	1770 mm	1770 mm	1450 mm	–	–	1450 mm	–	–	–	–
E	1230 mm	1230 mm	1345 mm	1300 mm	1345 mm	1345 mm	1300 mm	1400 mm	1400 mm	1400 mm
F	2860 mm	2440 mm	1895 mm	2250 mm	1970 mm	1895 mm	2250 mm	3000 mm	2550 mm	3000 mm
F1	2250 mm	1830 mm	2975 mm	–	–	2975mm	–	–	–	–
G	–	–	–	47°	–	–	47°	50°	50°	50°
H	2580 mm	2580 mm	2550 mm	2550 mm	2550 mm	2550 mm	2550 mm	2650 mm	2650 mm	2650 mm
H1	1850 mm	1850 mm	1960 mm	1960 mm	1960 mm	1960 mm	1960 mm	1850 mm	1850 mm	1850 mm
H2	1960 mm	1980 mm	–	–	–	–	–	–	–	–
H3	2080 mm	2080 mm	–	–	–	–	–	–	–	–
J	–	–	–	100 mm	–	–	100 mm	180 mm	180 mm	180 mm
K	270 mm	270 mm	260 mm	260 mm	260 mm	260 mm	260 mm	380 mm	380 mm	380 mm
L	3080 mm	3080 mm	3300 mm	3220 mm	3310 mm	3300 mm	3220 mm	3420 mm	3420 mm	3530 mm
L1	1500 mm	1500 mm	1650 mm	1700 mm	1700 mm	1650 mm	1700 mm	1800 mm	1800 mm	1800 mm
L2	810 mm	810 mm	810 mm	810 mm	810 mm	810 mm	810 mm	880 mm	880 mm	880 mm
L3	770 mm	770 mm	840 mm	710 mm	800 mm	840 mm	710 mm	740 mm	740 mm	850 mm
M	327 mm	327 mm	–	–	–	–	–	–	–	–
P	–	–	–	–	–	–	–	–	–	–
V	–	–	–	–	–	–	–	–	–	740 mm
W	–	–	–	–	–	–	–	–	–	155°
X	–	–	–	–	–	–	–	–	–	72°
Y	–	–	–	–	–	–	–	–	–	25°
Z	–	–	–	–	–	–	–	–	–	1910 mm

OPERATING-DATA	1001 (High-tipping)	1001 (narrow)	1501 (High-tipping)	1501 (Swivel tipping)	1601 (Front tipping)	1601 (High-tipping)	1601 (Swivel tipping)	2001 (Swivel tipping)	2001 (Swivel tipping with low discharge height)	2001 SLE
Payload	1000 kg	850 kg	1500 kg	1500 kg	1500 kg	1500 kg	1500 kg	2000 kg	2000 kg	2000 kg
Tare weight	1215 kg	1150 kg	1320 kg	1261 kg	1261 kg	1261 kg	1261 kg	1810 kg	1810 kg	1810 kg
Skip capacity levelled	415 l	415 l	650 l	650 l	829 l	650 l	650 l	930 l	785 l	775 l
Skip capacity stacked high	525 l	525 l	800 l	800 l	1,044 l	800 l	800 l	1,210 l	1,000 l	1,050 l
Skip capacity Water levelling	275 l	275 l	420 l	325 l	612 l	420 l	325 l	680 l	570 l	550 l
ENGINE										
Make/Type	YANMAR 3TNV76	YANMAR 3TNV76	YANMAR 3TNV76	YANMAR 3TNV76	YANMAR 3TNV76	YANMAR 3TNV76	YANMAR 3TNV76	YANMAR 3TNV82A	YANMAR 3TNV82A	YANMAR 3TNV82A
Model	watercooled 3-cylinder	watercooled 3-cylinder	watercooled 3-cylinder	watercooled 3-cylinder	watercooled 3-cylinder diesel engine	watercooled 3-cylinder diesel engine	watercooled 3-cylinder diesel engine	watercooled 3-cylinder	watercooled 3-cylinder	watercooled 3-cylinder
Power SFlb (Iso 3046/1)	17 kW (23.1 PS)	17 kW (23.1 hp)	17 kW (23.1 hp)	17 kW (23.1 hp)	17 kW (23.1 hp)	17 kW (23.1 hp)	17 kW (23.1 hp)	22.3 kW (30.6 hp)	22.3 kW (30.6 hp)	22.3 kW (30.6 hp)
Displacement	1.116 cm^3	1.116 cm^3	1.116 cm^3	1.116 cm^3	1.116 cm^3	1.116 cm^3	1.116 cm^3	1331 cm^3	1331 cm^3	1331 cm^3
Operating speed	3000 min^{-1}	3000 min^{-1}	3000 min^{-1}	3000 min^{-1}	3000 min^{-1}	3000 min^{-1}	3000 min^{-1}	3000 min^{-1}	3000 min^{-1}	3000 min^{-1}
Exhaust emissions	ac. 97/68/EU, 3A	ac. 97/68/EU, 3A	ac. 97/68/EU, 3A	ac. 97/68/EU, 3A	ac. 97/68/EU, 3A	ac. 97/68/EU, 3A	ac. 97/68/EU, 3A	ac. 97/68/EU, 3A	ac. 97/68/EU, 3A	ac. 97/68/EU, 3A
DRIVE CHARACTERISTICS										
Drive speed	0–16 kph	0–16 kph	0–16 kph	0–16 kph	0–16 kph	0–16 kph	0–16 kph	0–21 kph	0–21 kph	0–21 kph
Steering angle	+/- 33°	+/- 33°	+/- 33°	+/- 33°	+/- 33°	+/- 33°	+/- 33°	+/- 37°	+/- 37°	+/- 37°
Oscillation	+/-15°	+/- 15°	+/- 15°	+/- 15°	+/- 15°	+/- 15°	+/- 15°	+/- 15°	+/- 15°	+/- 15°
Turning radius outside	3.200 mm	3.200 mm	3.300 mm	3.300 mm	3.300 mm	3.300 mm	3.300 mm	3.500 mm	3.500 mm	3.500 mm
Gradeability	45 %	45 %	50 %	50 %	50 %	50 %	50 %	45 %	45 %	45 %
DRIVE										
Drive	4 WD hydrostatic, TWIN-LOCK	4WD	4WD	4WD	2WD	2WD	2WD	4WD	4WD	4WD
Steering	hydrostatic articulated frame steering with emergency steering properties									
Tyres	10.00/75-15 Tractor profile	6.00/16; Tractor profile	10.00/75-15 Tractor profile	10.00/75-15 Tractor profile	10.0/75-15 Tractor profile	10.0/75-15 Tractor profile	10.0/75-15 Tractor profile	10.0/75-15; 8 Ply Tractor profile	10.0/75-15; 8 Ply Tractor profile	10.0/75-15; 8 Ply Tractor profile
Service brake	hydrostatic	hydrostatic	hydrostatic	hydrostatic	foot-operated mech. drum brakes for front wheels			hydrostatic	hydrostatic	hydrostatic
Parking brake	*spring brake / disc brake in oil bath Operation also via flip-switch on dashboard							Operation via electrically-operated handbrake lever		
HYDRAULICS SYSTEM										
Drive pump	Axial piston pump	Axial piston pump	Axial piston pump	Axial piston pump	variable axial piston pump with automotive drive			Axial piston pump	Axial piston pump	Axial piston pump
Flow rate	84 l/min	84 l/min	135 l/min	135 l/min	84 l/min	84 l/min	84 l/min	168 l/min	168 l/min	168 l/min
Operating pressure	360 bar	360 bar	360 bar	360 bar	420 bar	420 bar	420 bar	420 bar	420 bar	420 bar
Work pump	Gear pump	Gear pump	Gear pump	Gear pump	Gear pump	Gear pump	Gear pump	Gear pump	Gear pump	Gear pump
Flow rate	25 l/min	25 l/min	25 l/min	25 l/min	25 l/min	25 l/min	25 l/min	25 l/min	25 l/min	25 l/min
Operating pressure	170 bar	170 bar	170 bar	170 bar	170 bar	170 bar	170 bar	175 bar	175 bar	175 bar
TANK CAPACITY										
Diesel tank	15 l	15 l	20 l	20 l	20 l	20 l	20 l	27 l	27 l	27 l
Hydraulic oil tank	20 l	20 l	20 l	20 l	20 l	20 l	20 l	28 l	28 l	28 l
ELECTRICS										
Voltage	12 V	12 V	12 V	12 V	12 V	12 V	12 V	12 V	12 V	12 V
Battery	45 Ah	45 Ah	45 Ah	45 Ah	45 Ah	45 Ah	45 Ah	74 Ah	74 Ah	74 Ah
Alternator	40 A	40 A	40 A	40 A	40 A	40 A	40 A	40 A	40 A	40 A
Starter	1.1 kW	1.1 kW	1.1 kW	1.1 kW	1.1 kW	1.1 kW	1.1 kW	1.7 kW	1.7 kW	1.7 kW
NOISE LEVELS										
Noise LWA (acc. 2000/14/EC)	101 dB(A)	101 dB(A)	101 dB(A)	101 dB(A)	101 dB(A)	101 dB(A)	101 dB(A)	101 dB(A)	101 dB(A)	101 dB(A)